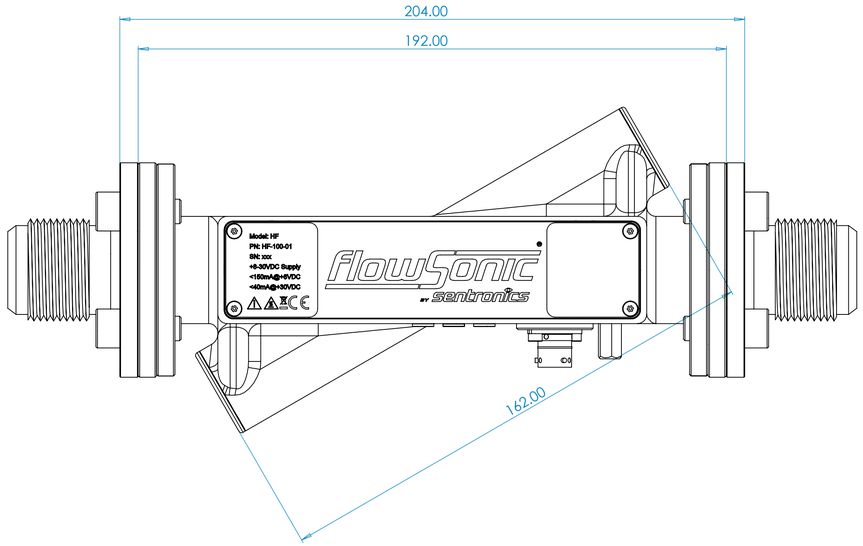

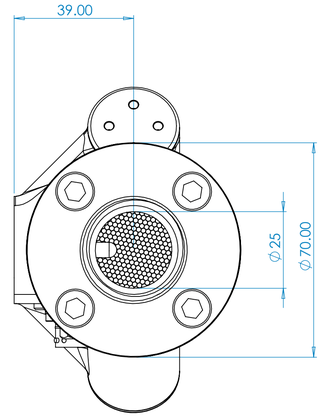

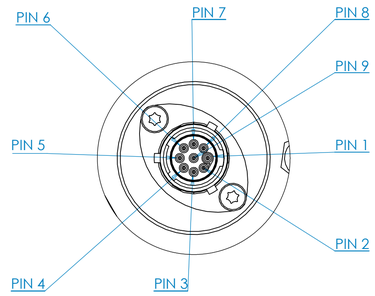

DETAIL A
SCALE 2 : 1

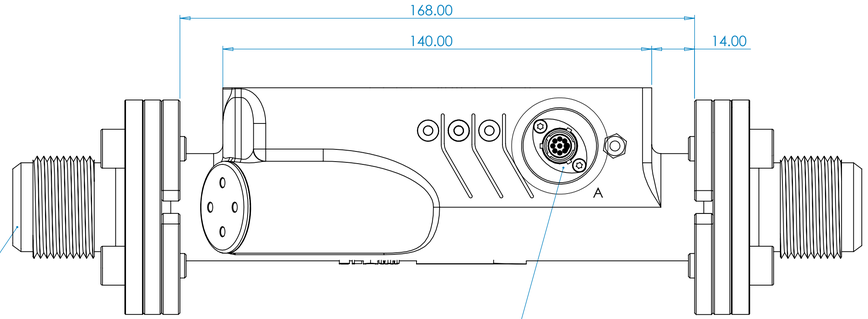

-16AN/JIC FITTING
(1-5/16" X 12 UNF THREAD)

REFER TO SPECIFICATION NOTES FOR
CONNECTOR DETAILS

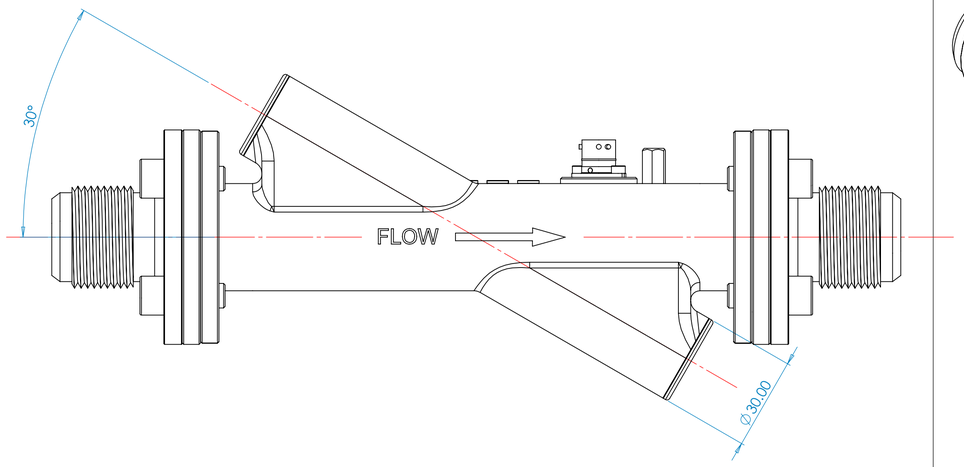

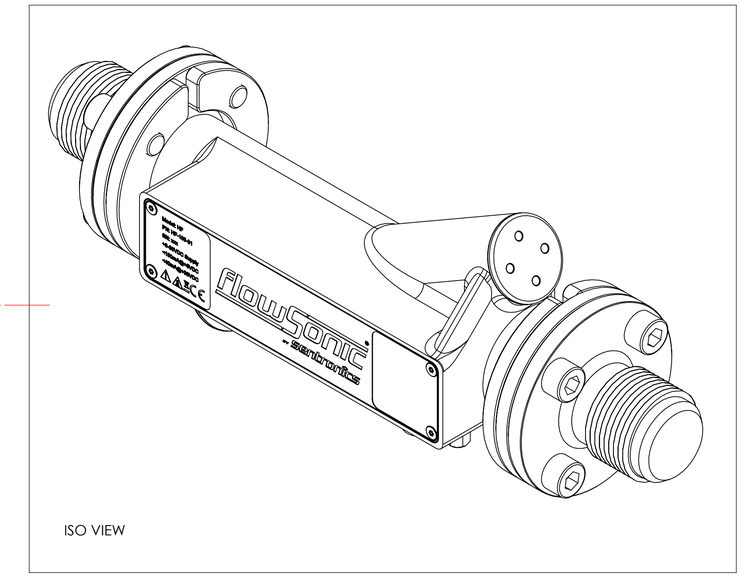

ISO VIEW

FLOWSONIC HF CAN SPECIFICATION

Design Standard: ISO 11898-2 (high-speed applications)
Message Format: 2.0A (11-bit identifier)
CAN Transmission Baud Rate: 1 Mbit/sec
CAN Termination Resistor: No

TRANSMITTED DATA FRAMES

Instantaneous Flow Rate

Default Message ID: 0x190

Message Description	Flow Rate Instantaneous (Vol and Mass)
Message ID	BASE ID + 0
Message Format	Big Endian (MSB First)
Message Rate	Nominal 100Hz (Configurable based on license option)
Message Type	Continuous Transmit @ message rate

Byte 0	Byte 1	Byte 2	Byte 3	Byte 4	Byte 5	Byte 6	Byte 7
Volume Flow (32 bit signed integer)				Mass Flow (32 bit signed integer)			
Base Units: 0.01L/min				Base Units: 0.01g/min			
Max: 2147483647 ml/min (21,474.83647 LPM), Min: -2147483647 ml/min (-21,474.83647 LPM)				Max: 2147483647 g/min (21,474.83647 kg/min), Max: -2147483647 g/min (-21,474.83647 kg/min)			

Cumulative Flow Rate Totalizers

Default Message ID:0x194

Message Description	Flow Rate Cumulative (Vol and Mass)
Message ID	BASE ID + 4
Message Format	Big Endian (MSB First)
Message Rate	100Hz
Message Type	Continuous Transmit @ message rate

Byte 0	Byte 1	Byte 2	Byte 3	Byte 4	Byte 5	Byte 6	Byte 7
Cumulative Total Volume (32 bit signed integer)				Cumulative Total Mass (32 bit signed integer)			
Base Units: 0.01ml				Base Units: 0.01g			
Max: 2147483647 ml (21,474.83647 Litres), Min: -2147483647 ml (-21,474.83647 Litres)				Max: 2147483647 g (21,474.83647 kg), Max: -2147483647 g (-21,474.83647 kg)			

Multiplexed Debug and Diagnostic Message

Default Message ID: 0x191

Message Description	Multiplexed debug and diagnostics message
Message ID	BASE ID + 1
Message Format	Big Endian (MSB First)
Message Rate	100Hz
Message Type	Continuous Transmit @ message rate

Byte 0	Byte 1	Byte 2	Byte 3	Byte 4	Byte 5	Byte 6	Byte 7
Speed of sound: 0.1m/s/bit		0	CAN ID select (1 to 6, unsigned)	Fuel temperature (0.01deg/C/bit signed)		PCB temperature (0.1deg/C/bit signed)	
		1	Firmware version (unsigned)	Min Fuel temperature (0.01deg/C/bit signed)		Max Fuel temperature (0.01deg/C/bit signed)	
		2		Min PCB temperature (0.1deg/C/bit signed)		Max PCB temperature (0.1deg/C/bit signed)	
		3	Boot loader version (unsigned)	H/w version (unsigned)	FPGA version (unsigned)	Supply voltage (0.1V/bit unsigned)	
		4		Diagnostics blocked (unsigned)		Seconds from hardware reset (s unsigned)	
		5	DIN programming counter (unsigned)	Latched diagnostics blocked (unsigned)		Service time indicator (min unsigned)	
		6	Manufacturer calibration counter (unsigned)	Last fault code (bit field)		Elapsed time indicator (min unsigned)	
		7	Third party calibration counter (unsigned)	Sensor serial number (unsigned)		resistor sense input voltage (0.001V/bit unsigned)	
		8	Density calibration counter (unsigned)	Firmware checksum (unsigned)		density calibration checksum (unsigned)	
		9		Bootloader checksum (unsigned)		density value in use (0.1kg/m3/bit, unsigned)	
		10(A)		Configuration checksum (unsigned)		Reference density at a reference temperature (0.1kg/m3/bit, unsigned)	
		11(B)	Measurement error count MSB (unsigned)	calibration checksum (unsigned)		Reference temperature for density calibration (0.1deg/C/bit unsigned)	
		12(C)	Measurement error count LSB (unsigned)	Third party calibration checksum (unsigned)		Slope (Density v s temperature) (0.001kg/m3/deg/C/bit signed)	
		13(D)	Signal acquisition failure code (bit field)	PCB serial number (unsigned 32 bits)			
		14(E)		Measuring processor software checksum (unsigned 32 bits)			
		15(F)				X axis accelerometer ABS integral (1g g/bit unsigned)	
		16(10)		Y axis accelerometer ABS integral (1g g/bit unsigned)		Z axis accelerometer ABS integral (1g g/bit unsigned)	
		17(11)		Min X axis acceleration (0.1g/bit signed)		Max X axis acceleration (0.1g/bit signed)	
		18(12)		Min Y axis acceleration (0.1g/bit signed)		Max Y axis acceleration (0.1g/bit signed)	
		19(13)		Min Z axis acceleration (0.1g/bit signed)		Max Z axis acceleration (0.1g/bit signed)	

DEUTSCH ASDD-006-09-PN-HE	
PIN 1	SUPPLY +
PIN 2	CAN High
PIN 3	CAN Low
PIN 4	TTL Pulse Output
PIN 5	Analog Output
PIN 6	Serial comms from meter to PC (TXD)
PIN 7	Serial comms from PC to meter (RXD)
PIN 8	Reserved (do not connect)
PIN 9	Ground (GND)

UNLESS OTHERWISE SPECIFIED:
DIMENSIONS ARE IN MILLIMETERS
SURFACE FINISH:
TOLERANCES:
LINEAR: ±0.05
ANGULAR: ±0.05

FINISH: HARD ANODISED

DEBUR AND BREAK SHARP EDGES

	NAME	SIGNATURE	DATE
DRAWN	NJM		06/06/17
CHK'D			
APPV'D			
MFG			
Q.A			

THIRD ANGLE

MATERIAL: AL 6082 T6

WEIGHT:

REVISION ISSUE	DESCRIPTION	DATE	APPROVED
01	FIRST RELEASE	01/10/18	NJM

TITLE: HF ASSEMBLY - 16AN

DWG NO. HF-100-01

A1

SCALE: 1:1

SHEET 1 OF 1

© DESIGN COPYRIGHT RESERVED
Sentronics Limited
Unit B2 Shannon Business Centre
Shannon
Co. Clare
Ireland
Tel. +353(0)61-471670
Fax. +353(0)61-471671
Website: www.sentronics.com